AD1 Amplifier, with NF2 driver tube

Original design by K.Anzai, Japan. Also reconstructed by Jean Hiraga

Great simularity with Yamamoto AD1 amplifier of first generation

Never use oil-paper coupling caps.

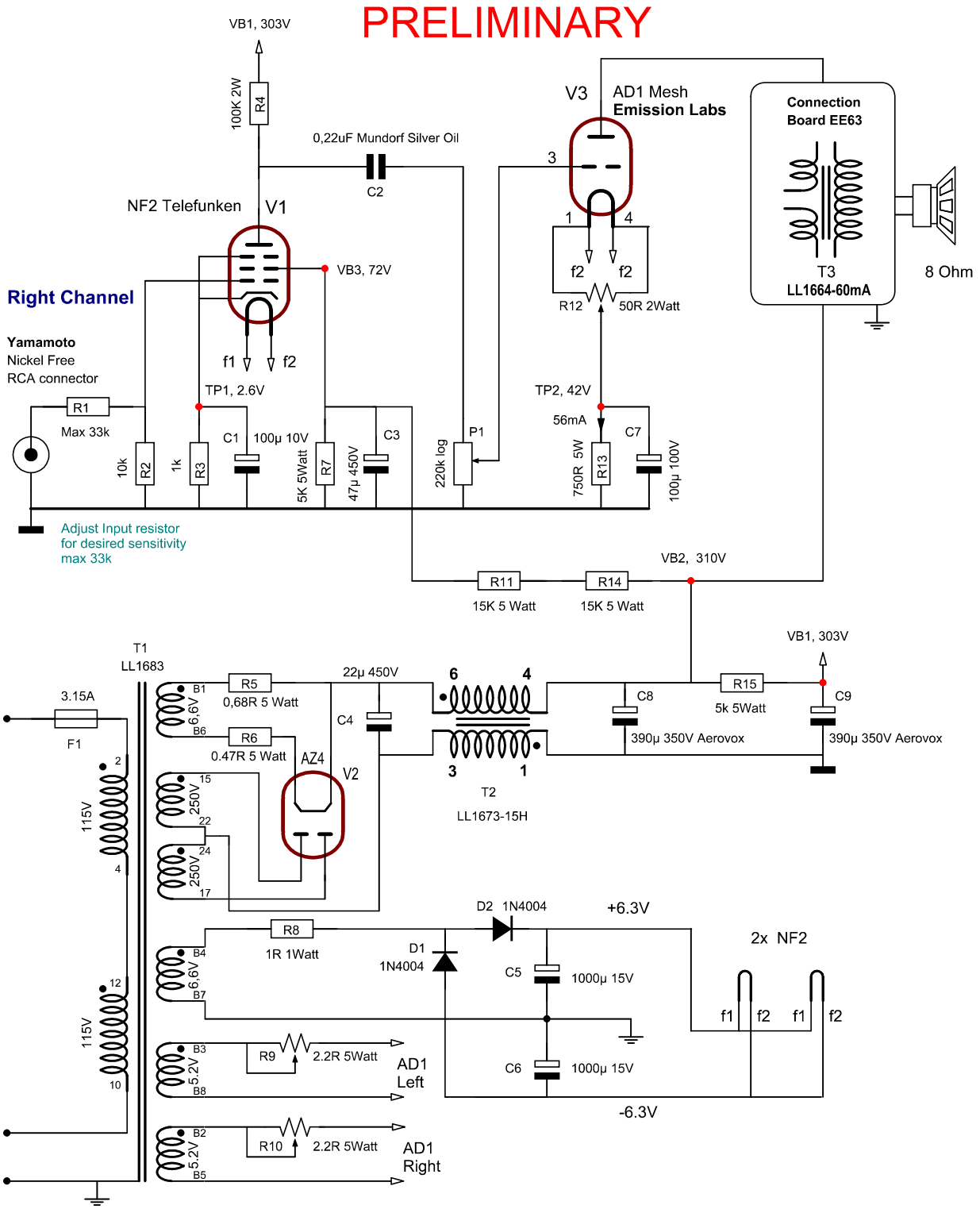

Specifications:

Output Power = 4,1Watt @ 5.....80kHz, 3dB

Input sensitivity: 0,5V for full output

Document Title:	AD1, NF2 Amplifier by K. Anzai, JAPAN.				
Date created:	17-April-2010		Last Revision:	B	29.1.2023
Pages:	1	of 1	Amplifier Part		
Created by:	Dipl. Ing. Jac van de Walle www.jacmusic.com (Copyright)				